G-NOR ELECTRONICS CO.,LTD.

GNL-10003xx
(Φ10mm ROUND TYPE)
Ultra Brightness

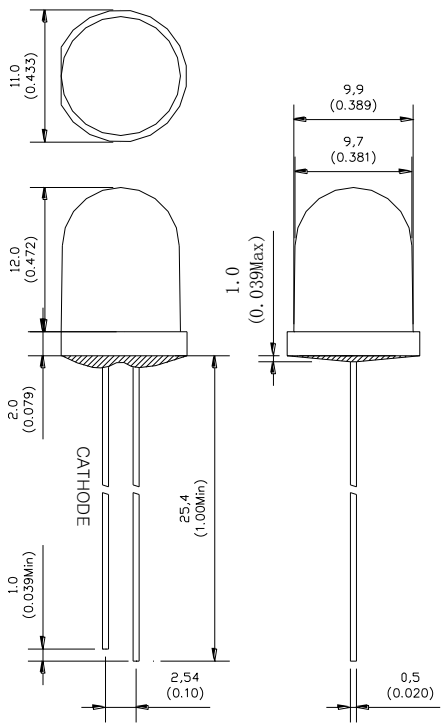

ABSOLUTE MAXIMUM RATING:(Ta=25℃)

Parameter			Unit
DC Forward Current	30		mA
Reverse Voltage	5		V
Reverse Current (Vr-5V)	10		μA
Peak Forward Current ,tw ,=1 msec Duty ,=1/20	150		mA
Operation Temperature	-40	+80	℃
Storage Temperature	-40	+100	℃
Solder Dip (5 seconds,1.6mm from body) Temperature	300	±5	℃

Feature:

1.Small flange without stand-off
2.Long life-solid state reliability
3.Long lead length(25.4mm)
4.Versatile mounting on P.C. board or panel

Description:

1.The shape of this series is round
2.General application is for indication,illumination,etc.
3.These LED lamps are available with a choice of defferent colors,light intensities,epoxy colors,etc.

Part Number	EMITTED COLOR		Lens Color	Peak Wavelength (nm)	Vf (v) Typ.	IV (If=20mA) mcd Min.	IV (If=20mA) mcd Typ.	View Angle 2θ1/2
GNL-10003BD	InGaN	Blue	Blue Diffused	470	3.5	800	1600	30°
GNL-10003WW	InGaN	White	White Diffused	5500K-7000K	3.5	900	1800	30°