G-NOR ELECTRONICS CO.,LTD.

GNL-2523xx (2x5mm RECTANGULAR TYPE)

Standard Brightness

ABSOLUTE MAXIMUM RATING:(Ta=25℃)

Parameter			Unit
DC Forward Current	30		mA
Reverse Voltage	5		V
Reverse Current (Vr-5V)	10		μA
Peak Forward Current ,tw ,=1 msec Duty ,=1/20	150		mA
Operation Temperature	-40	+80	℃
Storage Temperature	-40	+100	℃
Solder Dip (5 seconds,1.6mm from body) Temperature	300	±5	℃

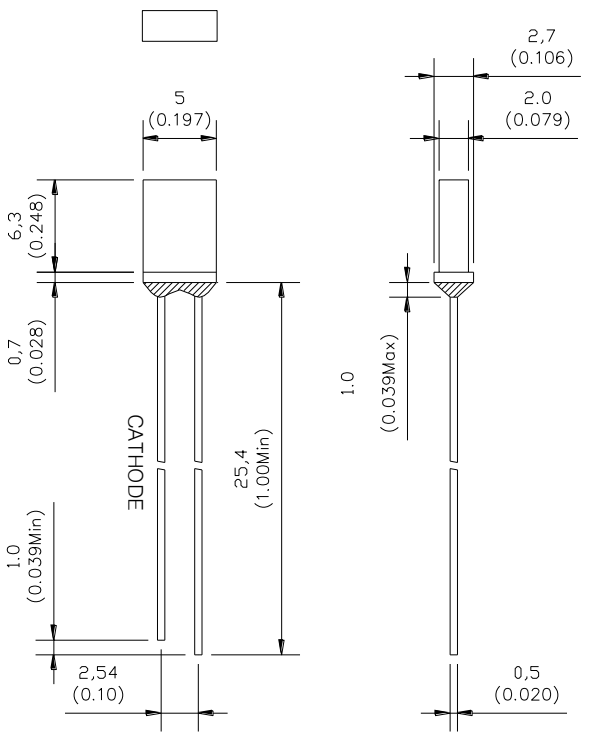

Feature:

1.Small flange without stand-off
2.Long life-solid state reliability
3.Long lead length(25.4mm)
4.Versatile mounting on P.C. board or panel

Description:

1.The shape of this series is round
2.General application is for indication,illumination,etc.
3.These LED lamps are available with a choice of defferent colors,light intensities,epoxy colors,etc.

Part Number	EMITTED COLOR		Lens Color	Peak Wavelength (nm)	Vf (v) Typ.	IV (If=20mA) mcd		View Angle 2θ1/2
						Min.	Typ.	
GNL-2523BD	InGaN	Blue	Blue Diffused	465	3.5	80	100	120°
GNL-2523WW	InGaN	White	white Diffused	5500-6500K	3.5	350	600	120°