Description

Report Item

Specifications:

The working voltage of the instrument itself: DC 4-30V

(the maximum input voltage cannot exceed 30V, otherwise the instrument will burn out)

The working current of the instrument itself: ≤20mA

Voltage measurement range: DC 0-100V

Current measurement range: 0-50/ 0-100A

Voltage resolution (V): 0.1V

Current resolution (A): 0.01A

Measurement accuracy: 1% (±1 digit)

Display: 0.28" digital tube, two-color blue and red

Refresh rate: about 300mS/time

Size: 48mm * 29mm * 26mm

Working temperature: -10℃-+ 65℃

Package Included:

1x DC 100V 10A Voltmeter Ammeter

3.Wiring diagram of independent power supply for Tange 50A or 100A meter

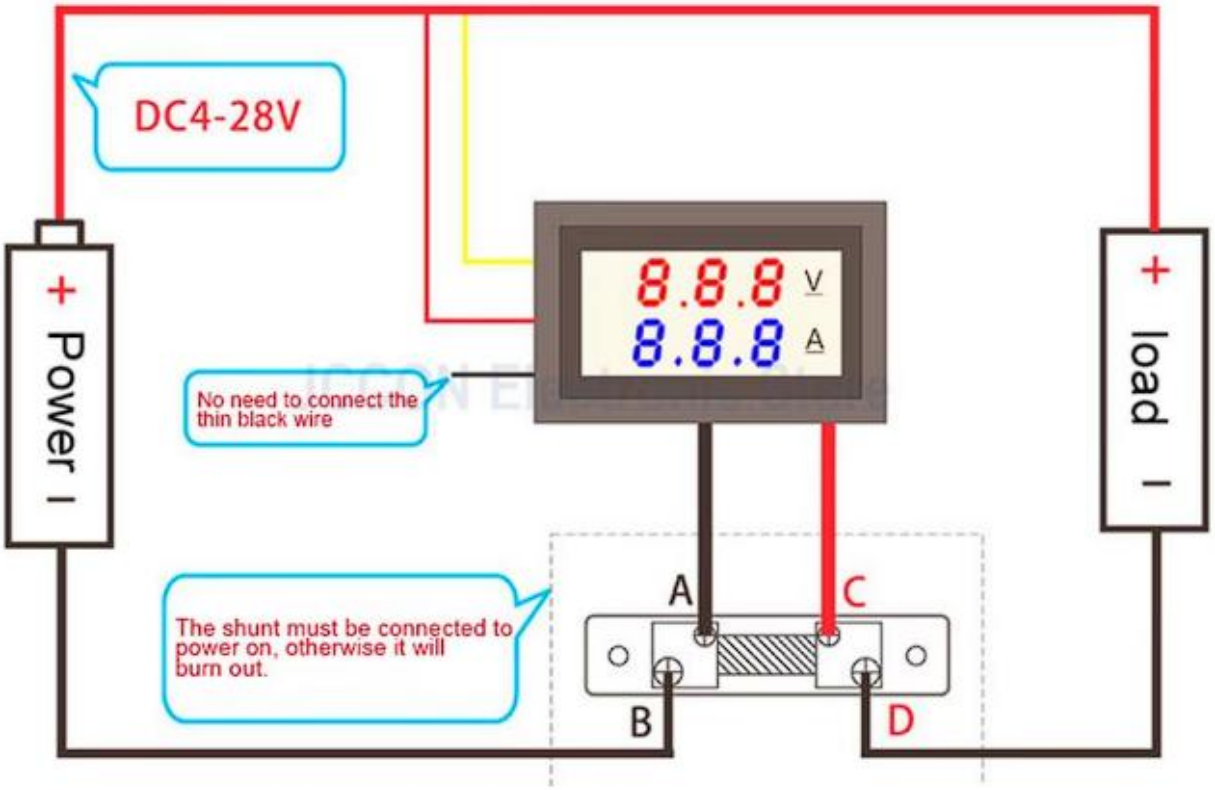

4.Wiring diagram of independent power supply for Tange 50A or 100A meter

