



Specifications

- MCU: STM32H7A3RIT6, 280MHz Cortex-M7, 1.4MB RAM, 2MB Flash
- IMU: ICM42688P
- Baro: SPL06-001
- OSD: AT7456E
- Blackbox: 128MB Flash (1G-bit NAND)
- 6x Uarts (1,2,3,4, 5, 6) with built-in inversion.
- 11x PWM outputs
- 1x I2C
- 1x CAN
- 4x ADC (VBAT, Current, VB2, Cur2)
- 3x LEDs for FC STATUS (Blue, Red) and 3.3V indicator(Red)
- USB Type-C(USB2.0)
- 8x PWM outputs on 2x JST-SH1.0_8pin connector for 2x 4in1 ESC
- 1x JST-GH1.25_4pin connector (5V/CAN-H/CAN-L/G)
- 9V output ON/OFF switchable
- Digital video OSD is supported by any spare UART

Power

- Vbat Input: 6~36V (2~8S LiPo)
- BEC: 5V 2A cont. (Max.3A)
- BEC: 9V 2A cont. (Max.3A)
- LDO 3.3V: Max.200mA
- No Current Sensor built-in
- ADC VB2 pad supports Max. 69V (voltage divider: 1K:20K)

FC Firmware

- ArduPilot: MATEKH7A3 (4.6 or newer)
- ArduPlane https://firmware.ardupilot.org/Plane/beta/MatekH7A3/
- ArduCopter https://firmware.ardupilot.org/Copter/beta/MatekH7A3/
- Flashing with STM32CubeProgrammer

Physical

- Mounting: 30.5 x 30.5mm, Φ4mm with Grommets Φ3mm
- Dimensions: 36 x 36 x 5 mm
- Weight: 7g
- 3D step H7A3-SLIM_step.zip

Including

- 1x H7A3-SLIM
- 6x Silicon grommets M4 to M3
- 2x JST-SH1.0_8pin cable, 5cm, & 8pin connectors
- 1x JST-GH-4P to JST-GH-4P cable for CAN port, 20cm

LAYOUT

Cam: Video IN from Camera
VTx: Video OUT to Video Transmitter

Tx6/Rx6: USART6

5V: BEC 5V 2A cont. Max.3A
9V: BEC 9V 2A cont. Max.3A
*** 9V ON/OFF can be switched via ArduPilot Relay
G: Ground

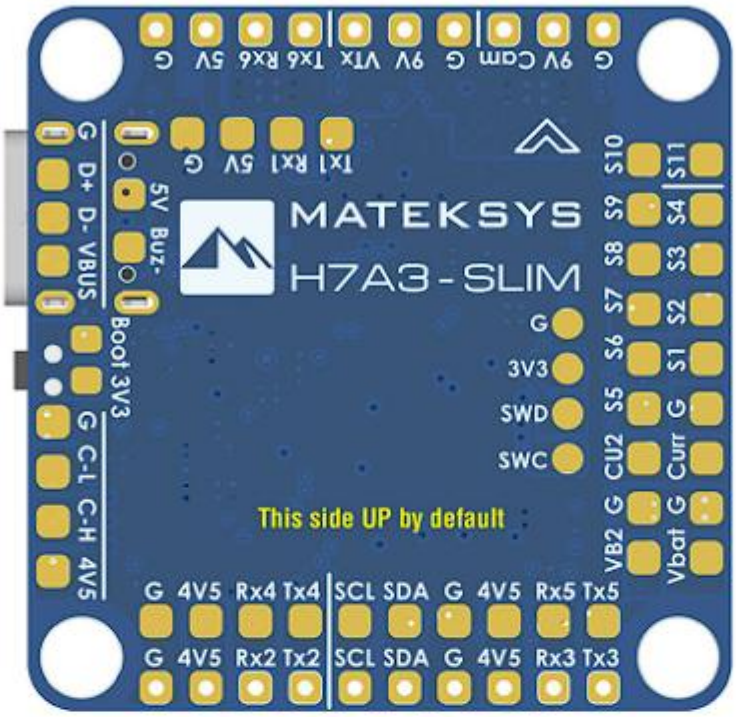

Tx1/Rx1: USART1

Buz- & 5V: Passive 5V buzzer
Buz- /5V/G: Matek DBUZ5V

D+ & D-: USB data
VBUS: USB voltage

Boot: MCU boot pin
3V3: LDO 3.3V

C-L: CAN low signal
C-H: CAN high signal

S1-S11: PWM1-PWM11

G: Ground

Vbat: Battery Voltage IN
6~36V DC(2~8S LIPO)
Voltage Sensor divider: 1K:20K
Regulator 5V and 9V are powered by Vbat

Curr: current sensor signal IN
BATT_CURRENT_SENS ADC

VB2: BATT2_VOLTAGE_SENS ADC
Voltage Sensor divider: 1K:20K
Support 0-69V DC

CU2: BATT2_CURRENT_SENS ADC

SWD/SWC: MCU debug pin

Tx2/Rx2: USART2
for Serial_RX by default

4V5: 4.4~4.8V, Max.500mA
*** the voltage is also supplied when connecting via USB
*** 5V is not supplied when connecting USB only.

Tx3/Rx3: USART3
Tx3/Rx3: UART4
Tx5/Rx5: UART5
SCL & SDA: I2C3,

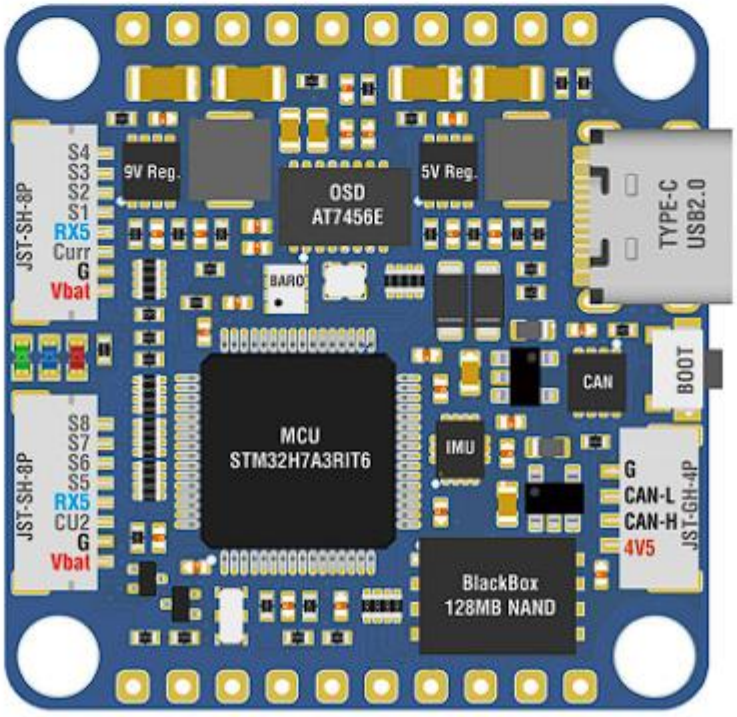

RX5 : for ESC telemetry
Curr: current sensor signal IN

LED 3.3: Red, 3.3V Status
LED 0: Blue, FC Status
LED 1: Green, FC Status

RX5 : for ESC telemetry
CU2: BATT2 current sense ADC

Size & Weight: 36x36x6mm /7g
Holes: Φ4mm, 30.5mm x 30.5mm

Packing
1x H7A3-SLIM
2x SH_8pin cable 5cm & SH_8pin connectors
2x GH-4P to GH-4P cable 20cm
6x M3 Silicon Grommets

Wiring (Octocopter)

Ardupilot hwdef MATEKH7A3

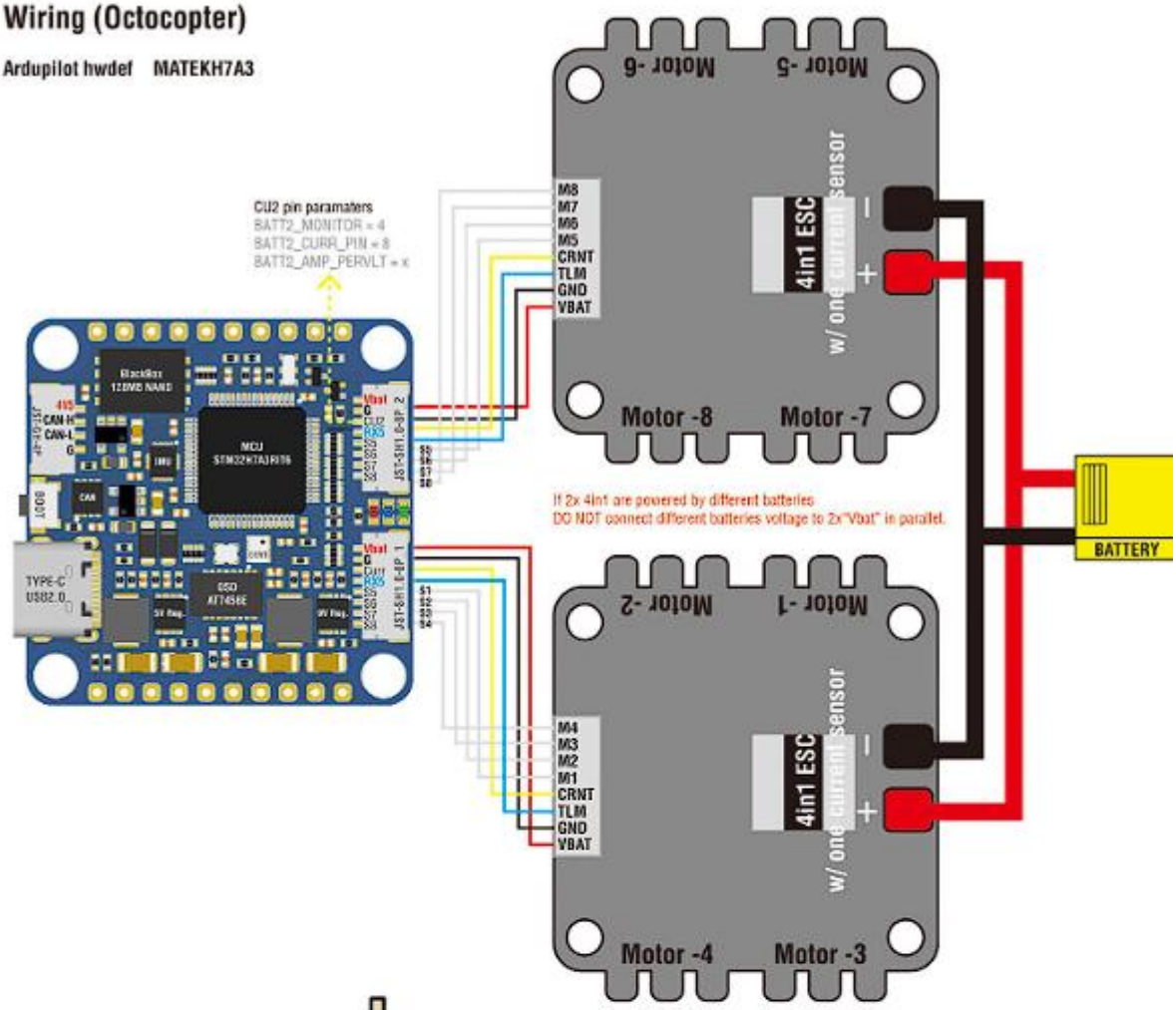

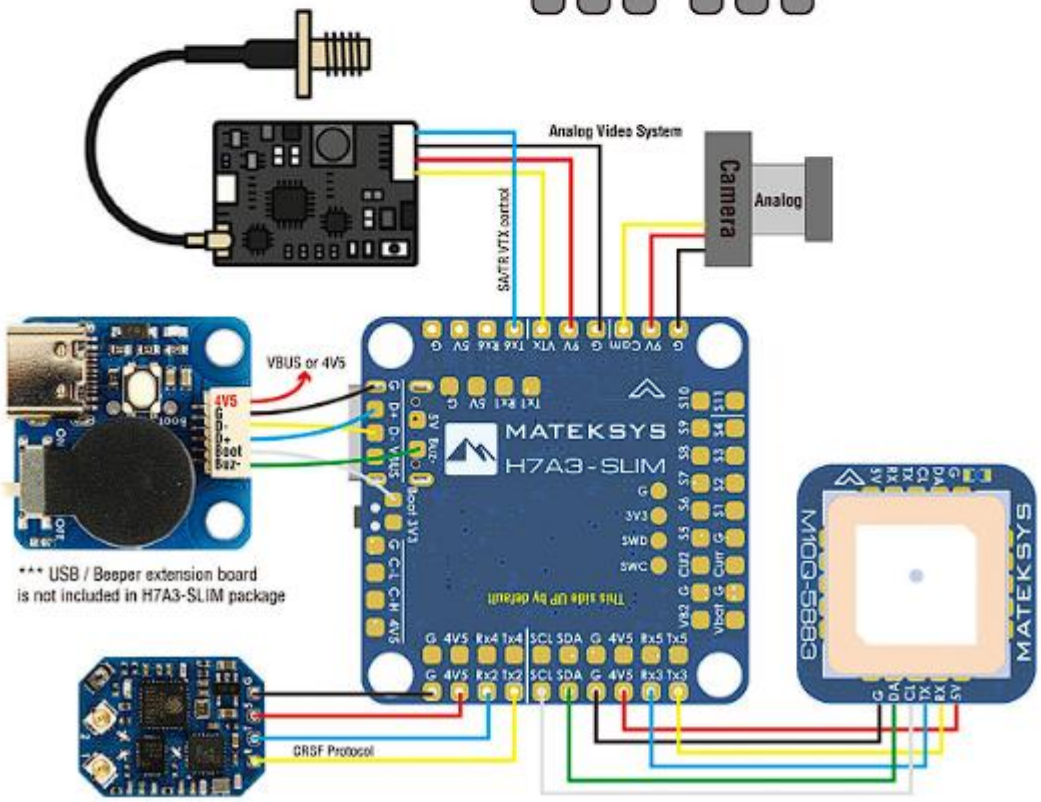

Wiring (CAN)

Ardupilot hwdef MATEKH7A3

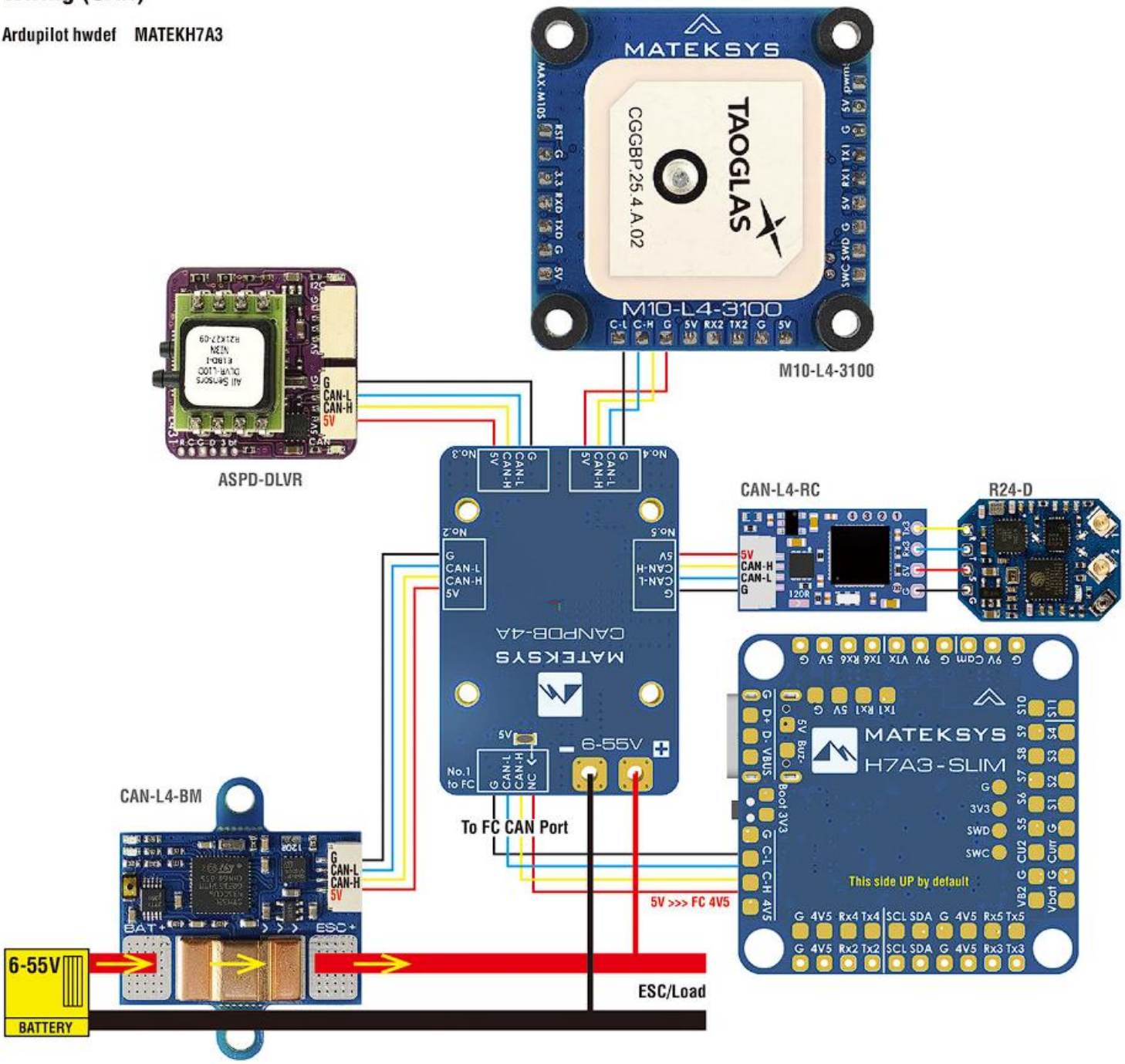

ArduPilot						
PWM	S1	PWM1 GPIO50	5 V tolerant I/O	TIM1_CH2	DMA/Bi-DShot	Group1
	S2	PWM2 GPIO51	5 V tolerant I/O	TIM1_CH3	DMA/Bi-DShot	
	S3	PWM3 GPIO52	5 V tolerant I/O	TIM2_CH1	DMA/Bi-DShot	Group2
	S4	PWM4 GPIO53	5 V tolerant I/O	TIM2_CH2	DMA/Bi-DShot	
	S5	PWM5 GPIO54	5 V tolerant I/O	TIM3_CH3	DMA/Bi-DShot	Gourp3
	S6	PWM6 GPIO55	5 V tolerant I/O	TIM3_CH4	DMA/Bi-DShot	
	S7	PWM7 GPIO56	5 V tolerant I/O	TIM3_CH1	DMA/Bi-DShot	
	S8	PWM8 GPIO57	5 V tolerant I/O	TIM3_CH2	DMA/Bi-DShot	
	S9	PWM9 GPIO58	5 V tolerant I/O	TIM4_CH1	DMA/DShot	Group4
	S10	PWM10 GPIO59	5 V tolerant I/O	TIM4_CH2	DMA/DShot	
	S11	PWM11 GPIO60	5 V tolerant I/O	TIM16_CH1	DMA/DShot	Group5
	PWM1~PWM11 are Dshot and PWM capable. However, mixing Dshot and normal PWM operation for outputs is restricted into groups, ie. enabling Dshot for an output in a group requires that ALL outputs in that group be configured and used as Dshot, rather than PWM outputs. If servo and motor are mixed in same group, make sure this group run lowest PWM frequency according to the servo specification. That is to say. If Servo support Max. 50Hz, ESC must run at 50Hz in this group.					

PINIO	9V switch	GPIO81		RELAY1_PIN		81
ADC	Vbat pad	BATT_VOLTAGE_SENS	6~36V	BATT_VOLT_PIN BATT_VOLT_MULT		10 21.0
	Curr pad	BATT_CURRENT_SENS	0~3.3V	BATT_CURR_PIN BATT_AMP_PERVLT		11 X
	VB2 Pad	BATT2_VOLTAGE_SENS	0~69V	BATT2_VOLT_PIN BATT2_VOLT_MULT		18 21.0
	CU2 Pad	BATT2_CURRENT_SENS	0~3.3V	BATT2_CURR_PIN BATT2_AMP_PERVLT		8 X
I2C	SCL/SDA	I2C3	5V tolerant I/O	on board Baro SPL06-001	Address	0x76
				Digital Airspeed I2C MS4525 DLVR-L10D	ARSPD_BUS ARSPD_TYPE ARSPD_TYPE	0 1 9
				Magnetometer	COMPASS_AUTODEC	1
CAN	C-H/C-L	CAN2	5V tolerant I/O	CAN	CAN_D1_PROTOCOL CAN_P1_DRIVER	1 1
				CAN GPS CAN Compass CAN Airspeed sensor	GPS_TYPE COMPASS_TYPEMASK ARSPD_TYPE	9 0 8

UART	USB	USB		console	SERIAL0_PROTOCOL	2
	TX1 RX1	USART1 w/DMA	5 V tolerant I/O	Telemetry	SERIAL1_PROTOCOL	2
	TX2 RX2	USART2 w/DMA	5 V tolerant I/O	RC input/Receiver	SERIAL2_PROTOCOL	23
	TX3 RX3	USART3 w/DMA	5 V tolerant I/O	GPS	SERIAL3_PROTOCOL	5
	TX4 RX4	UART4 w/o DMA	5 V tolerant I/O	Spare	SERIAL4_PROTOCOL	-1
	TX5 RX5	UART5 w/o DMA	5 V tolerant I/O	Spare	SERIAL5_PROTOCOL	-1
	TX6 RX6	USART6 w/o DMA	5 V tolerant I/O	Spare	SERIAL6_PROTOCOL	-1

RC INPUT

RC input is configured on the USART2(SERIAL2). It supports all serial RC protocols. SERIAL2_PROTOCOL=23 by default.

- PPM is not supported.
- CRSF requires Tx2 & Rx2 connection, and set SERIAL2_OPTIONS to “0” (default).
- SBUS/DSM/SRXL connects to the Rx2 pin, but SBUS requires that the SERIAL2_OPTIONS be set to “3”.
- FPort requires connection to Tx2, and set SERIAL2_OPTIONS to “7”. If Telemetry doesn’t work, try set SERIAL7_OPTIONS = 135.
- SRXL2 requires a connection to Tx2, and automatically provides telemetry. Set SERIAL2_OPTIONS to “4”.
- Any UART can be used for RC system connections in ArduPilot also, and is compatible with all protocols except PPM. See Radio Control Systems for details.

ArduPilot Relay(PINIO)

- 9V output ON by default
- PC13 PINIO1 OUTPUT GPIO(81) //9V power switche.g.
- RELAY1_FUNCTION 1
- RELAY1_PIN 81 // PINIO1 GPIO
- RC7_OPTION 28 //Relay On/Off, Use CH7 of Transmitter to set 9V ON/OFF

The configured feature will be triggered when the auxiliary switch’s pwm value becomes higher than 1800. It will be deactivated when the value falls below 1200.

Check the pwm value sent from the transmitter when the switch is high and low using the Mission Planner’s Initial Setup >> Mandatory Hardware >> Radio Calibration screen. If it does not climb higher than 1800 or lower than 1200, it is best to adjust the servo end points in the transmitter.