HXG12864ZG-V1

128 x 64 dots + white led backlight, 4/8-bit parallel or SPI Serial 5.0V or 3.3V

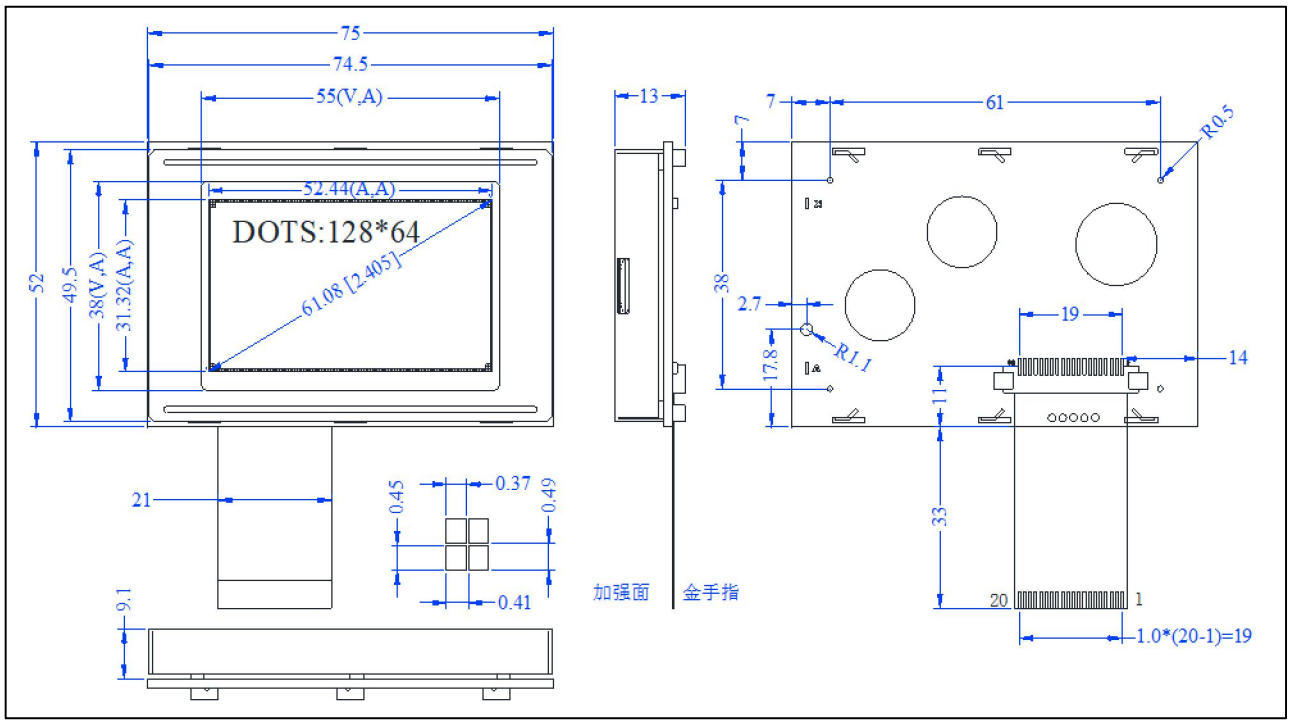

ABSOLUTE MAXIMUM RATINGS

Item	Symbol	Min.	Max.	Unit
Supply Voltage(Logic)	V_{DD} - V_{SS}	-0.3	3.6	V
Supply Voltage(LCD)	V_{OUT} - V_{SS}	-0.3	14.5	V
Input Voltage	V_I	-0.3	V_{DD}+ 0.3	V
Operating Temp.	T_{opr}	-20	70	°C
Storage Temp.	T_{stg}	-30	80	°C

MECHANICAL DATA

Item	Nominal Dimensions	Unit
Module Size (W x H x T)	75.0 x 52.7 x 13.0	mm
Viewing Area (W x H)	55.0 x 38.0	mm
Dot Pitch (W x H)	0.41 x 0.49	mm
Dot Size (W x H)	0.37 x 0.45	mm
Weight	Approx. 22	g

ELECTRICAL CHARACTERISTICS (V_{DD}=2.9V to 3.3V)

Item	Symbol	Test Condition	Min.	Typ.	Max.	Unit
Input High Voltage	V_{IH}	–	0.8V_{DD}	–	V_{DD}	V
Input Low Voltage	V_{IL}	–	0	–	0.2V_{DD}	V
Output High Voltage	V_{OH}	I_{OH} = - 0.1mA	0.8V_{DD}	–	V_{DD}	V
Output Low Voltage	V_{OL}	I_{OL} = 0.1mA	0	–	0.2V_{DD}	V
Supply Current	I_{DD}	V_{DD} = 3.3V	–	0.5	1.2	mA
LCD Driving Voltage	V_0 - V_{SS}	Ta=25°C	–	10.3	–	V

PIN CONNECTIONS

Pin	Symbol	Level	Function
1	VSS	0V	Ground
2	VDD	5V	Power supply(3.3V optional)
3	V0(NC)	–	LCD driving voltage
4	RS(CS)	H/L	Register selection/Chip selection
5	R/W(SID)	H/L	Read/Write, Serial data input
6	E(SCLK)	H/L	Enable signal, Serial Clock
7~14	D0~D7	H/L	Data bus, DB0~DB3 NC in 4 bits mode
15	PSB(NC)	H/L	Parallel serial mode selection
16	NC	–	No connection
17	RST	H/L	Reset. Active "L"
18	VOUT(NC)	H/L	LCD driving voltage output
19	LEDA	5V	LED backlight anode(3.3V optional)
20	LEDK	0V	LED backlight cathode

BLOCK DIAGRAM

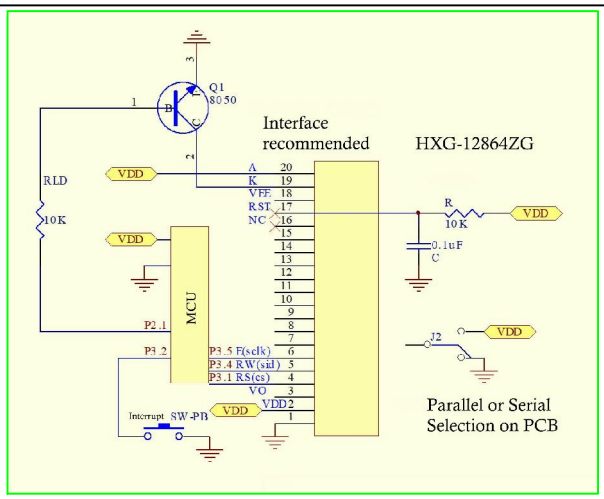

LED BACKLIGHT SPECIFICATIONS (Ta=25° C)

Item	Symbol	Typ.	Max.	Unit
Forward Voltage	V_f	5.0	5.5	V
Forward Current	I_f	45	60	mA
LED Color	White			