SPECIFICATION FOR APPROVAL

Customer :
Description **AC FAN**
Customer Part No: REV:
Fulltech Model No: **UF-15PE23BWHN** REV: **00**
Issue Date: **NOV.20.26**

PLEASE SEND ONE COPY OF THIS SPECIFICAITON BACK AFTER YOU SIGNED APPROVAL FOR PRODUCTION PRE-ARRANGMENT.

APPROVED BY:

DATE:

FULLTECH ELECTRIC CO., LTD
NO.31, NEI-SHI ROAD, LU-CHU DISTRICT 33852,
TAOYUAN CITY, TAIWAN, R.O.C.
TEL: 886-3-3246161
FAX: 886-3-3245596

Information and data is subject to change without prior notification.
No. 31, Nei-Shi Road, Lu-Chu, Taoyuan 33852, Taiwan / http://www.fulltech.com.tw / TEL: 03-324-6161 / FAX: 03-324-5596

HISTORY

CUSTOMER: _____

CUSTOMER P/N: _____

FULLTECH MODEL: UF-15PE23BWHN

REV	DESCRIPTION	DRAWN	CHECKED	APPROVED	ISSUE DATE

Information and data is subject to change without prior notification.

No. 31, Nei-Shi Road, Lu-Chu, Taoyuan 33852, Taiwan / http://www.fulltech.com.tw / TEL: 03-324-6161 / FAX: 03-324-5596

SPECIFICATIONS

ITEM \ MODEL	UF-15PE23B-HN
RATED VOLTAGE	AC230V
VOLTAGE RANGE	AC207-253V
SPEED(RPM)	50Hz 2650 RPM±10% 60Hz 2950 RPM±10%
RATED CURRENT	50Hz 0.24 A±10% 60Hz 0.20 A±10%
RATED INPUT	50Hz 36 W±10% 60Hz 33 W±10%
LOCKED CURRENT	50Hz 0.32 A±10% 60Hz 0.28 A±10%
MAX. AIR VOLUME	50Hz 160±10% CFM 60Hz 180±10% CFM
MAX. STATIC PRESSURE	50Hz 0.16±10% inH2O 60Hz 0.18±10% inH2O
OPERATING TEMP.	-40°C~+50 °C
MAX. OPERATING HUMIDITY	85%
STORAGE TEMP.	-40°C~+80 °C
ROTATING DIRECTION	ANTI-CLOCKWISE DIRECTION
BLOWING DIRECTION	EXHAUST FROM LABEL SIDE
INSULATION RESISTANCE	DC 500 V 100MΩ
DIELECTRIC STRENGTH	AC 1500V / 1MIN.
NOISE	50Hz 48 (Max.53) dB 60Hz 53 (Max.58) dB
SAFETY PROTECTION	IMPEDANCE PROTECTION
INSULATION GRADE	CLASS B
BEARING	BALL BEARING
LIFE EXPECTANCY	OVER 40000 HOURS (40℃)
FRAME MATERIAL	ALUMINUM (ADC-12)
IMPELLER	PLASTIC 94V-0 PBT. COVERING GLASS FIBER
DIMENSION	ϕ144*49 mm
WEIGHT	0.78 KG.

Information and data is subject to change without prior notification.
No. 31, Nei-Shi Road, Lu-Chu, Taoyuan 33852, Taiwan / http://www.fulltech.com.tw / TEL: 03-324-6161 / FAX: 03-324-5596

NOTES:

1.ALL READINGS ARE MEASURED AFTER STABLY WARMING UP THROUGH 30 MINUTES.

2. STANDARD AIR PROPERTY IS AIR AT (Td) 25°C TEMPER ATURE, (RH) 65% RELATIVE HUMIDITY , AND (Pb) 760 mmHg BAROMETRIC PRESSURE.

3. ACOUSTICAL NOISE MEASURING CONDITION:

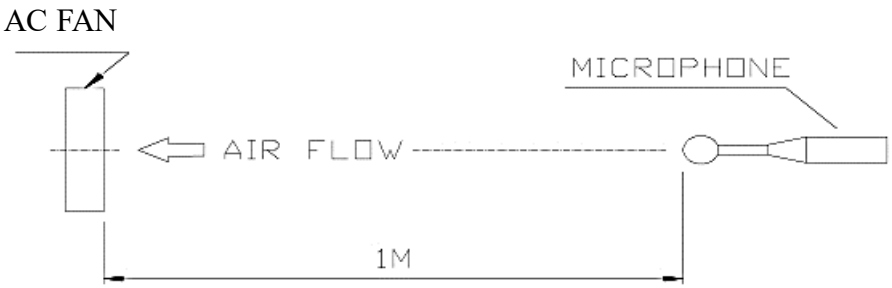

4. NOISE IS MEASURED AT RATED VOLTAGE IN FREE AIR IN A SEMI-ANECHOIC CHAMBER WITH A & D SOUND LEVEL METER WITH MICROPHONE AT A DISTANCE OF ONE METER FROM THE FAN INTAKE.

Information and data is subject to change without prior notification.
No. 31, Nei-Shi Road, Lu-Chu, Taoyuan 33852, Taiwan / http://www.fulltech.com.tw / TEL: 03-324-6161 / FAX: 03-324-5596

PRODUCT DRAWING

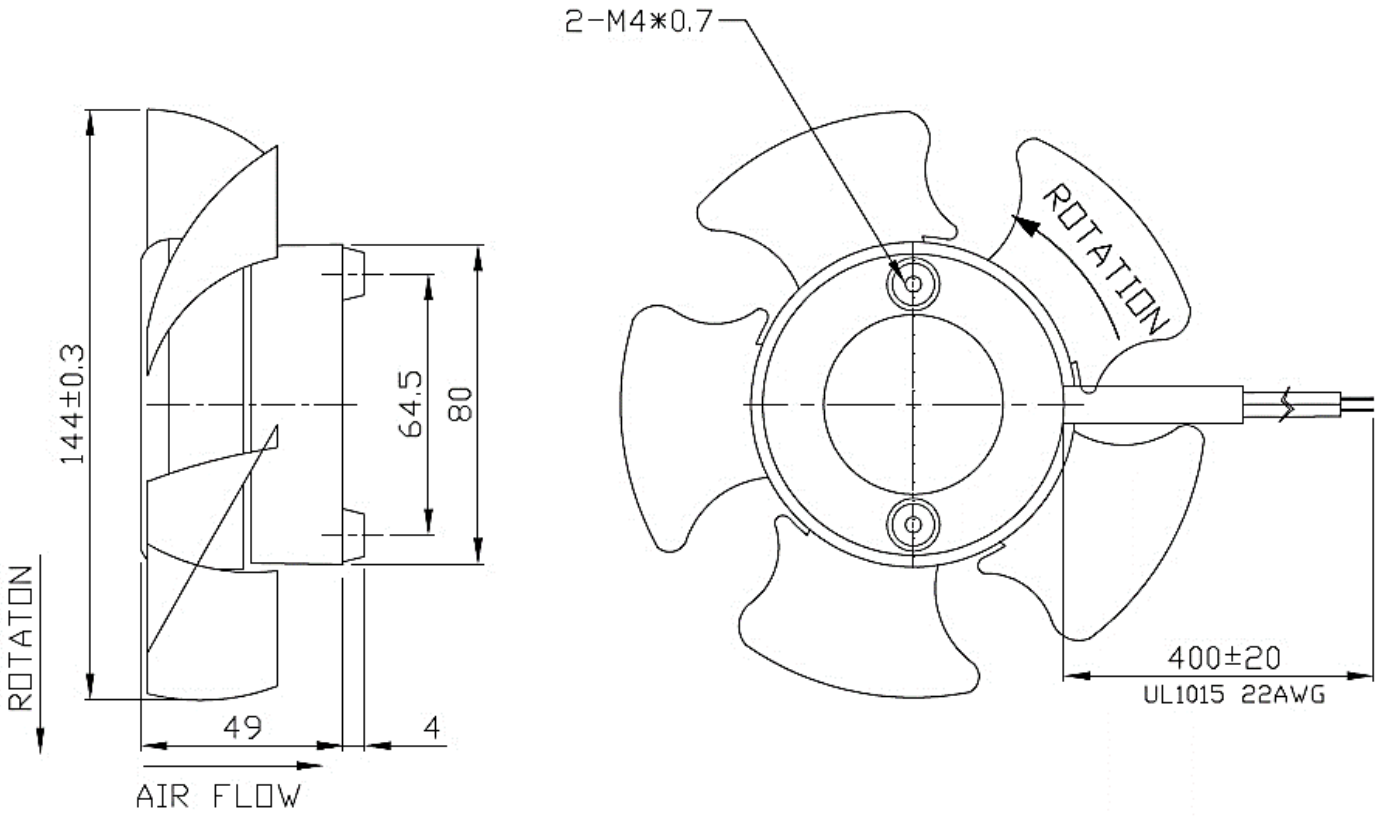

Lead Wire Type

MOEDL:15PE

Information and data is subject to change without prior notification.

No. 31, Nei-Shi Road, Lu-Chu, Taoyuan 33852, Taiwan / http://www.fulltech.com.tw / TEL: 03-324-6161 / FAX: 03-324-5596

AIR FLOW-STATIC PRESSURE CURVE

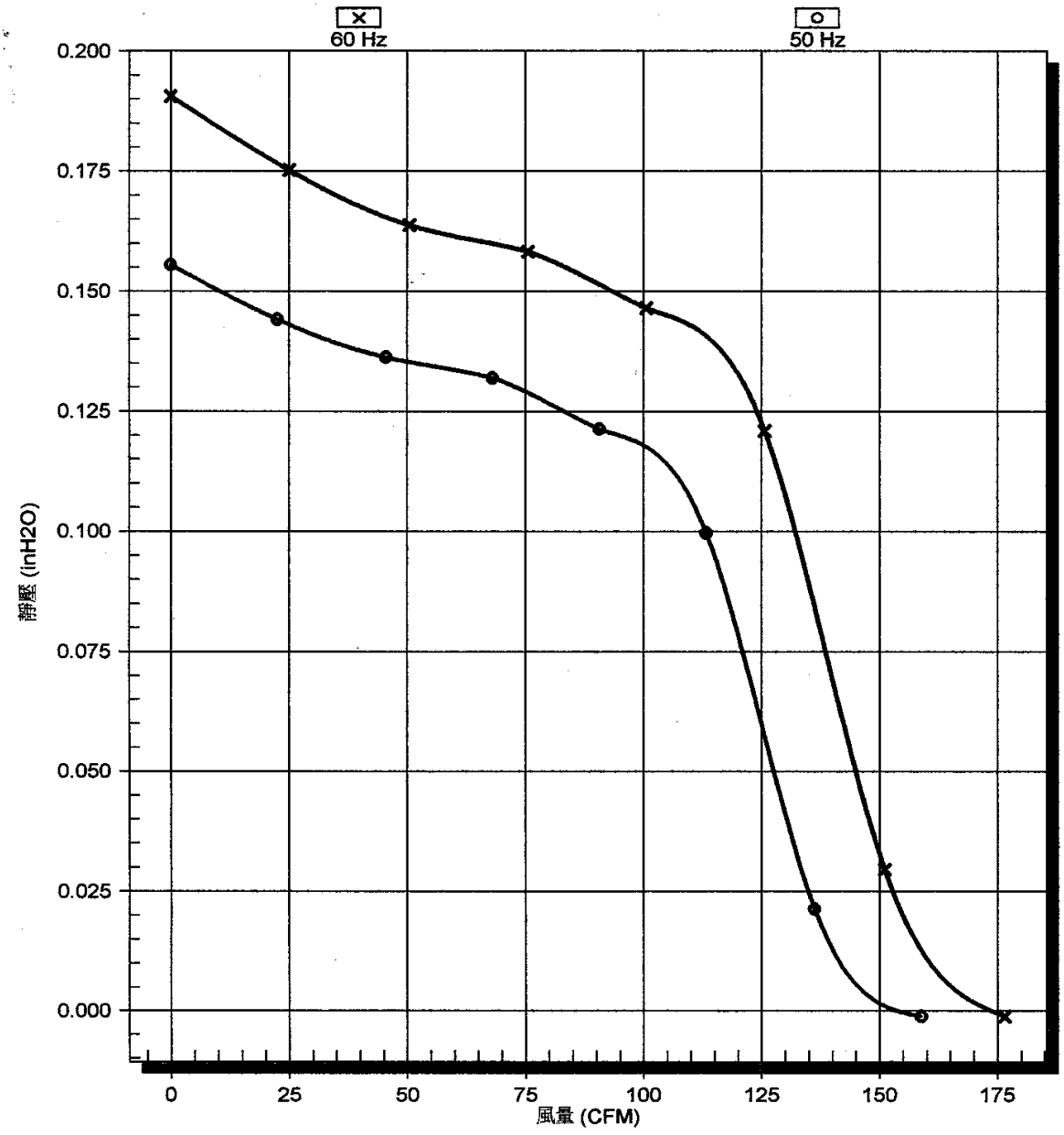

Information and data is subject to change without prior notification.
No. 31, Nei-Shi Road, Lu-Chu, Taoyuan 33852, Taiwan / http://www.fulltech.com.tw / TEL: 03-324-6161 / FAX: 03-324-5596

Operating Manual

1. SAFETY REGULATIONS AND INFOMRATION

- Read following operating instructions carefully before starting work on the device. Observe the following warnings to prevent machine malfunctions or danger to persons.
- These operating instructions maybe duplicated and distributed to inform about the potential dangers.

1.1 Staff Qualifications

- The device may only be transported, unpacked, installed, operated, maintained and otherwise used by qualified, trained and authorized technical staff.
- Authorized specialists are preferred to install the device with the electrical installation and carry out the test run.

1.2 Basic safety rules

- Please make sure the product is being installed and used in compliance with all safety standards.
- The locally applicable industrial safety regulations are always to be observed when working on the device.
- Please handle and install the product with caution. Hit or drop the product may cause possible damage.
- Please do not damage the product, especially the coil or lead wires during the installation, which may cause the possible smoke or fire.
- Fulltech Electric Co., Ltd.'s product warranty will not extend if your application exceeds the limitation of product specification.

Information and data is subject to change without prior notification.
No. 31, Nei-Shi Road, Lu-Chu, Taoyuan 33852, Taiwan / http://www.fulltech.com.tw / TEL: 03-324-6161 / FAX: 03-324-5596

1.3 Mechanical movement

- Risk of injury to body parts if coming into contact with the rotor or the impeller.

- Secure the device against accidental contact
- Before working on the system/machine, wait till all parts come to a standstill.
- Fulltech recommends to protect the fan from exposure to outside elements, such as dust, condensation, humidity or insects. Exposure of this fan to outside elements such as dust, condensation, humidity or insects may effect the fan performance and cause the safety concern.

1.4 Transportation

- Transport the fan in its original packaging is preferred.

1.5 Storage

- Please follow the requirement on product specification for fan storage. Make sure that fan will dry and clean and free from vibration.
- Please “do not” store the fan in a high humidity environment. If this fan is stored over 6 months, Fulltech suggests functional testing before using.

1.6 Warranty

- This fan is warranted against all defects which are proved to be fault in our workmanship and material for one year from the date of our delivery.
- The sole responsibility under the warranty shall be limited to the repair of the fan or the replacement thereof, at Fulltech’s sole discretion.
- Fulltech will not be responsible for the failures of it’s fan due to improper handling misuse or the failure to follow specification or instruction for use.
- Fulltech will not be responsible for any consequential damage to the customer’s equipment as a result of any fans proven to be defective.

Information and data is subject to change without prior notification.
No. 31, Nei-Shi Road, Lu-Chu, Taoyuan 33852, Taiwan / http://www.fulltech.com.tw / TEL: 03-324-6161 / FAX: 03-324-5596