REV.	ECN NO.	DATE
01	ADD PART NO.	08.08.30

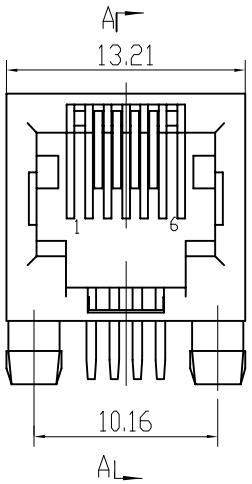

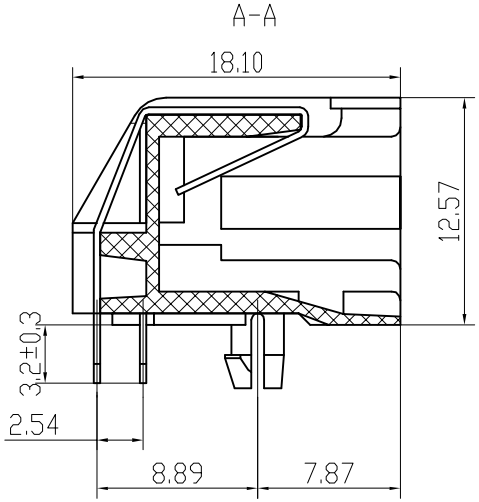

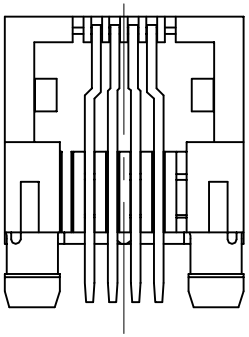

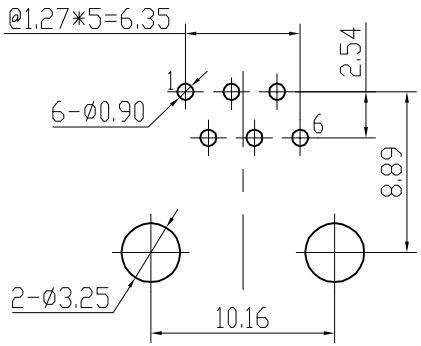

PC BOARD LAYOUT
THICKNESS=1.6MM

NOTES:

ELECTRICAL:

1. VOLTAGE RATING : 125 VAC RMS.
2. CURRENT RATING : 1.5 AMP.
3. CONTACT RESISTANCE : 45 MILLIOHMS MAX.
4. INSULATION RESISTANCE : 1000 MEGOHMS MIN @ 500 VDC.
5. DIELECTRIC STRENGTH : 1000 VAC RMS 60Hz, 1MIN.

MECHANICAL:

1. HOUSING MATERIAL : PBT/PA66 UL94V-0.
2. CONTACT MATERIAL : PHOSPHOR BRONZE T=035mm.
3. PLATING : 1: CONTACT AREA- SELECTIVE GOLD PLATING.
   2: TAILS PLATING TIN OVER NICKEL.
4. MATING/UNMATING FORCE : 22N/2.27kg Max..
5. RETENTION STRENGTH : 57.83N Min. .
6. OPERATING LIFE : 750 CYCLES MIN.

ENVIRONMENTAL:

1. STORAGE : -10°C~+40°C RELATIVE HUMIDITY<80%
2. OPERATION : -40°C~+85°C

MATES WITH MODULAR PLUG CONFORMING TO FCC PART 68, SUBPART F.
ROHS PART NUMBER:

P/N	DESCRIPTION	CONTACT PALTING GOLD	LOGO	MATERIAL COLOR
B572N-6406-M008	RJ11 1X1 5722 6P4C(2.3.4.5) W/O EAR	6u"	NO LOGO	PBT BLACK
B572N-6206-M002	RJ11 1X1 5722 6P2C(3.4) W/O EAR	6u"	NO LOGO	PBT GRAY
B572N-6406-U001	RJ11 1X1 5722 6P4C(2.3.4.5) W/O EAR	6u"	NO LOGO	PA66 BLACK
B572N-6206-U001	RJ11 1X1 5722 6P2C(3.4) W/O EAR	6u"	NO LOGO	PA66 GRAY
⚠ B572N-66GF-M007	RJ11 1X1 5722 6P6C W/O EAR	G/F	NO LOGO	PBT BLACK

RoHS Compliant

CZT® 意华通讯接插件有限公司
YIHUA COMMUNICATED CONNECTOR CO.,LTD.

FIRST ANGLE PROJECTION | A4 SIZE | SCALE 1:1 | UNIT mm | CUSTOMER: N/A | MODEL NO: N/A

TOLERANCES
.0 ± 0.25
.00 ± 0.20
.000 ± 0.10
ANGLES ± 0.5

MATERIAL: SEE_NOTE
FINISH: SEE_NOTE
SHEET 1 OF 1

DESIGNED: Qianpu08.08.30
CHECKED:
APPROVED:

NAME: RJ11 1x1 5722 6P JACK
DWG NO: E57C08031803
PART NO: SEE_NOTE

REV 01