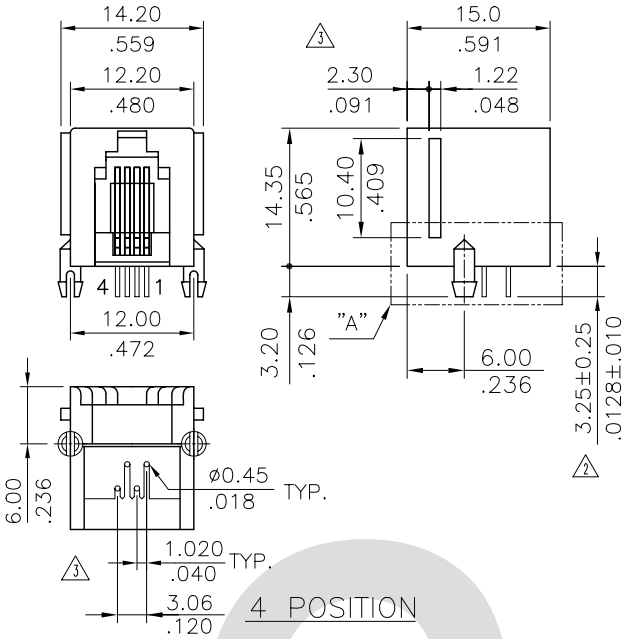

4 POSITION

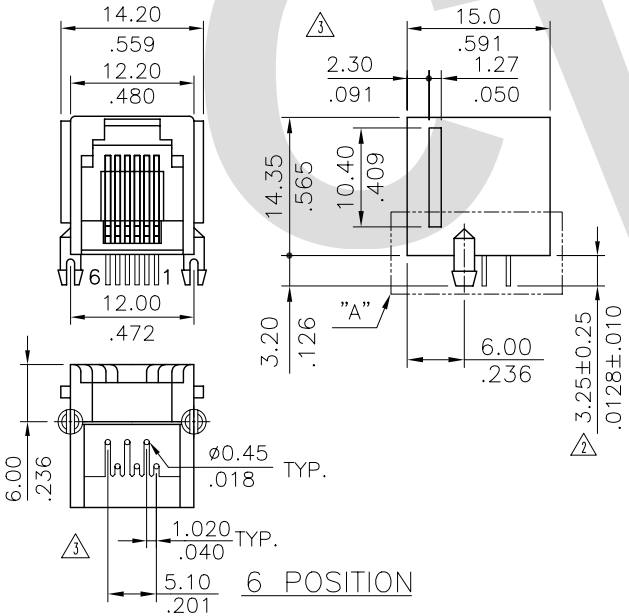

6 POSITION

Materials :

Insulator :

Glass filled Polyester UL 94V-0

Contact : Phosphor Bronze

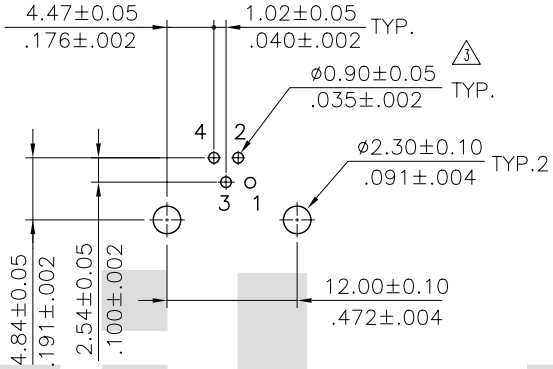

Recommended PC Board Layout

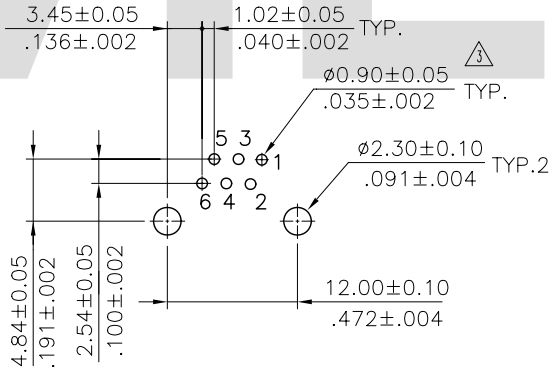

Recommended PC Board Layout

Ordering Code:

CJ04 66 3 1 9 00
① ② ③ ④ ⑤ ⑥

① Series No.

② Contacts:

44= 4P4C ; 42= 4P2C

66= 6P6C ; 64= 6P4C ; 62= 6P2C

③ Plating option:

2= Gold flash plated over Nickel

3= 0.38μm(15μ") Gold plated over 1.27μm(50μ") Nickel

4= 0.76μm(30μ") Gold plated over 1.27μm(50μ") Nickel

5= 1.27μm(50μ") Gold plated over 1.27μm(50μ") Nickel

④ Ports: 1= 1 port

⑤ Insulator Color: 1= Black ; 9= Gray

⑥ Other options: 00= Standard

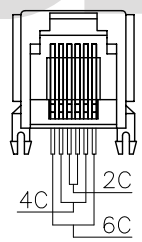

Contacts Position

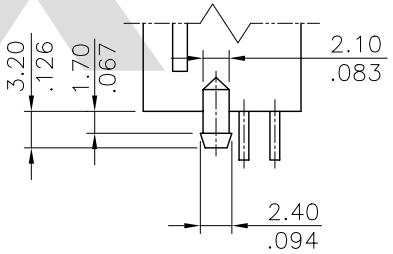

Detail A

RoHS Compliant

CviLux

SYM	NAME	DATE	REVISIONS
4			
3	Karen	09/05/08'	ECN08434/ECR008069-0
2	Sandy	11/22/06'	ECN06413/ECR06063-1
1	Eisley	06/08-05"	ECN05206

CVILUX.XORP 2008.09.16 ISSUED

		DATE
DRAWN BY:	Karen	9/10-08'
ENGINEER:	Eisley	9/11-08'
CHECKED BY:	Alex	9/11-08'
APPROVED BY:	Alex	9/11-08'

UNIT: mm / inch

TOLERANCE UNLESS OTHERWISE SPECIFIED

.X ± 0.30 / .012	X.° ± 1°
.XX ± 0.20 / .008	.X° ±
.XXX ± 0.08 / .003	.XX° ±

TITLE: BOARD MOUNT LOW PROFILE SIDE ENTRY TELEPHONE JACK

MATERIAL:

FINISH:

瀚荃股份有限公司
CviLux Corporation

DRAWING NO.	CJ0401SE	PART NO.	CJ04***1*00
SCALE	1 / 1	SHEET 1 OF 1	